专业船用起重设备制造商

Professional marine lifting equipment manufacturers

江阴市安海船舶设备有限公司

JIANGYIN SAFETY SEA Marine Equipment CO.,Ltd

HIGH ABILITY AND MORE SAFE ALL RIVERS FLOW TO THE SEA

道高益安 百川归海








目录 Contents

SAFETY SEA

JIANGYIN SAFETY SEA

01/02	目录/企业简介 Contents/Company Introdrction
03/04	企业资质 Certifecates
05/06	加工车间 Workshop
07/08	液压吊及电动吊 Hydralicu crane and electric crane
09/10	多用途起重机 Multipurpose crane
11/12	食品吊 Provlslon crane
13/14	杂物吊/液压滑动式水密门 Miscellaneous davit/Hrdraulic sliding weathertignt door
15/16	机舱行车 Engine room crane
17/18	手拉行车普通型 Manual trolley and chain block
19/20	手拉行车低空型 Manual trolley and chain block
21/22	超低空电动单轨行车A型/B型 Electric monorail trolley
23/24	食品升降机/海工类 Dumb waiter/Off shore

JIANGYIN
SAFETY SEA

企业简介
Company Introduction

江阴市安海船舶设备有限公司位于风景秀丽、交通便捷的古城要塞——江阴，本公司为制造和贸易以一体的综合性股份有限公司。以从事30多年起吊设备经验的工程师为技术龙头。有高级工程师和工程师若干。作业厂房4000m²，设备齐全。产品结构合理，管理体系优良。我公司所生产的各类船用吊杆、吊机、机舱起重设备，已被广泛应用于国内外船舶，并与国内各船厂保持良好的长期技术合作和业务关系。我司兼营船舶设备的国内国际贸易及代理业务。

我们本着严格企业管理，狠抓产品质量的原则，产品已通过各大船级社的工厂认可。我们还可以根据客户的要求进行自行或联合设计和生产，提供优质完善的售后服务。

我们的理念是：我们所追求的长期的战略合作伙伴关系是我们的生存基础。

我们的目标是：长期的战略合作伙伴关系的建立可以产生信任、信心和随之而来的忠诚的商业合作态度和长期共赢的远景。

对配套产品的质量保证能力及历史质量状况简介：船舶配套产品均受到各大船厂和国内外船东的好评，产品信誉良好，我厂恪守诚信“用户至上，质量第一，服务周到”的宗旨；产品已取得ccs、LR、DNV、GL、BV、ABS、NK、RINA、RS等船级社产品认证及产品证书。

Jiangyin Safety Sea Marine Equipment Co. , Ltd lies in the cancient city-Jiangyin, which has beautiful scenery and convenient lraffiC Comprehensive Limited Company in order to be made and integrative in trade of our company. The engineer of lifting apparatus experience is the technological tap that engaged in more than 30 years. There are senior engineers and several of engineers. 4000 m2 working area, reasonable products&fine management system. Our company produces all kinds of davit,cranes, overhead cane, has already widely used in domestic & foreign vessel, and keep good long-term technological cooperation and business relations with every domestic shipyard . Business domestic international trade of the marine equipments&agent business .

We are in line with enforcing the management on enterprise, take charge of the principle of product quality severely; our products have already been approved by all kinds of Class. We can design and produce by ourself or jointed depending on customer's requirments, offer the high-quality complete after-sale service.

Our idea is: The long-term strategic partnership relation that we pursue is our existence foundation.

Our goal is: The setting-up of long-term strategic partnership relation can make the trust, confidence, following loyal commercial cooperative attitude and far-view both provit for a long time.

Brief introduction of quality assurance ability and historical quality state to auxiliary products:Shipping auxiliary products are favorably approved by every large shipyard in domestic & international owner, the good product credit. Our factory abides by sincerity " consumers first, quality first, have courteous service " Aim; The products have already been approved &certified by CCS, LR DNv GL, BV ABS, NK, RINA,RS, etc.

企业资质 Certificates

SAFETY SEA



Certificate for Chain Block Accessories

Certificate No. : SHEH-0283-12

Date of Issue	06 June 2012	Date of Commencement	06 June 2012
Work's Order No.	-	Purchase Order No.	-
Place of Inspection	Jiangyin, China	Office	Shanghai Office
Manufacturer	Jiangyin Safety Sea Marine Equipment Co., Ltd		
Purchaser	-		

This Certificate is issued to the above client to certify that the undersigned Surveyor did at their request attend the above place for the purpose of examining and testing the item of material, equipment or any other item covered by this certificate in accordance with the relevant Rules for the Classification of the Ships and found it satisfactory.

Job Id. No.	JHT111	Quantity/Weight	1 Set/pc
Intended for	Hull No.: H757-111, Jiangsu Nantong Ship Heavy Industry Co.,Ltd		
Description	Chain Block Accessories of Engine Room Crane		
Approval Status	DBG App No. : DB24000-2008-11, 2011.08.15		

Particulars :

Hook & Block Unit
- —SWL : 50 KN
- —Test Load : 100 KN
- —Qty. : 1102011/1102012
- Shackle
- —SWL : 2.5 Ton
- —Test Load : 50 KN
- —Qty. : 1102015-016
- Steel Wire Rope
- — Type : 18 X 19 + FC
- — Breaking Load : ≥ 114 KN
- — Dia. of Wire Rope : 14 mm

Testing and Inspection :
Finished Condition Inspection

Marking, Serial No. and Remarks :
SHEH-0283
06-06-12
•Note: This certificate was issued based on the CCS certificate No. JY1PB0314_02, JY1PB0316_0 & NT1PB00015_05.

Surveyor (Geng Xiu-ming)
KOREAN REGISTER OF SHIPPING



ClassNK NIPPON KAIJI KYOKAI

Certificate No. : **FE12SC01418** Date : 9 December 2012

CERTIFICATE for Crane

THIS IS TO CERTIFY that the undersigned Surveyor to Nippon Kaiji Kyokai did at the request of the applicant, attend the testing and examination of the product(s) described below in accordance with the applicable rules/standards, and found it/them satisfactory.

Manufacturer : JIANGYIN SAFETY SEA MARINE EQUIPMENT CO., LTD
Place of Manufacturer : NO.815 BAIYU ROAD, NANZHA TOWN JIANGYIN JIANGSU PROVINCE CHINA
Applicant : JIANGYIN SAFETY SEA MARINE EQUIPMENT CO., LTD
Place of Inspection : JIANGYIN,CHINA
Intended for : ZHEJIANG SHIPBUILDING CO., LTD., Ship No.ZJB11-198
First Date of Inspection : 2 August 2012
Final Date of Inspection : 29 November 2012
Rules/Standards Applied : THE RELEVANT REQUIREMENTS OF THE RULES OF NIPPON KAIJI KYOKAI
Approved Drawings/Plans : 112507304
Total set(s) of Product : 1

Particulars

Type : 6.3T Engine Room Crane
Manufacturer's Type : AHDAR-3-13-7.5
Max. Hoisting Load(S.W.L.) : 6.3 Ton
Max. Hoisting Height : 13 m
Serial No. : 121377

Test and Inspection

Operation Test : Good
Load Test : Good
Construction Inspection : Good

Identification Mark
For identification, the product(s) was/were stamped:
1400 121377

Surveyor: ZHONG QINGMIN
Office: Shanghai Office

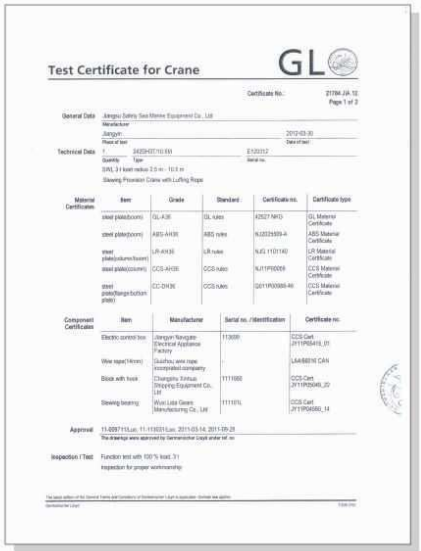

Test Certificate for Crane GL

Certificate No.: 21784.2A 12
Page 1 of 2

General Data: Jiangsu Safety Sea Marine Equipment Co., Ltd
Manufacturer: Jiangyin
Place of test: 2012-03-30
Date of test:

Technical Data: 1 | 3420HDT10.5X | E120212
Quantity | Type | Serial no.
SWL 3 t load radius 2.5 m - 10.5 m
Slewing Provision Crane with Luffing Rope

Material Certificates

Item	Grade	Standard	Certificate no.	Certificate type
steel plate(boom)	GL-A36	GL rules	42527 NHO	GL Material Certificate
steel plate(boom)	ABS-AH36	ABS rules	9J2035959-4	ABS Material Certificate
steel plate(column/boom)	LR-AH36	LR rules	NJG 1101140	LR Material Certificate
steel plate(column)	CCS-AH36	CCS rules	NJ11P00069	CCS Material Certificate
steel plate(flange/button plate)	CC-DH36	CCS rules	G011P00065-46	CCS Material Certificate

Component Certificates

Item	Manufacturer	Serial no. /Identification	Certificate no.
Electric control box	Jiangyin Navigate Electrical Appliance Factory	113009	CCS Cert JY11P05419_01
Wire rope(14mm)	Suzhou wire rope incorporated company	-	LA458016 CAN
Block with hook	Changshu Xinhua Shipping Equipment Co., Ltd	1111160	CCS Cert JY11P05049_20
Slewing bearing	Wuxi Lida Gears Manufacturing Co., Ltd	1111070,	CCS Cert JY11P04582_14

Approval: 11-0097111Jun. 11-113201Jun. 2011-03-14, 2011-09-28
The drawings were approved by Germanischer Lloyd under ref. as

Inspection / Test: Function test with 100 % load, 31
Inspection for proper workmanship



DET NORSKE VERITAS

COPY

SURVEY REPORT FOR 3T/10M PROVISION CRANE

THIS IS HEREBY TO CONFIRM that the undersigned surveyor did, at the request of Jiangyin Safety Sea Marine Equipment Co., Ltd., attend their workshop in February 2012 for the inspection/testing of the following product:

Manufacturer : Jiangyin Safety Sea Marine Equipment Co., Ltd., Jiangyin, P. R. China
Product : 3T/10m Provision Crane
SWL 3 tonnes, Max. working radius: 10 m
Serial no. : ZC120101
Drawings approval : PCMCN468/KZHAO/D30926-J-968, dated 2011-08-01,
Intended for : ZCHI Shipbuilding Co., Ltd., Hull no.: ZC3001, DNV Id.no.: 30926

The survey scope included the following aspects and found in order:

-Grades of materials used for construction found to be in accordance with approved drawings and with manufacturers certificates
-The Marine Motor has been certified by CCS and with CCS certificate No.:TZ11P01811;
-The Hydraulic Slew Drives has been certified by CCS and with CCS certificate No.: SH11P07128
-The Hydraulic Cylinder has been certified by CCS and with CCS certificate No.: TZ11P02442_23
-The Slewing Bearing has been certified by CCS and with CCS certificate No.: JY11P04580_12
-The wire ropes for crane have been certified by CCS and with CCS certificate No. NT11P00798_01
-The Block with hook has been certified by CCS and with CCS certificate No.: JY11P03349_01
-The shackle has been certified by CCS and with CCS certificate No.: JY11P03349_02
-The Hydraulic winch, type: HW2.5-2000H with works certificate;
-Visual inspection of the welds and review NDT (UT and MT) test reports;
-Witness of the production workshop test.

Final acceptance is subject to satisfactory on board test after installation.

The product was stamped as follows:

JYN-12-0827

Jiangyin, People's Republic of China
2012-03-05

Liu Jiuhzhong
Surveyor

DET NORSKE VERITAS AS, Nationalveien 1, NO-1322 Høvik, Norway. Telephone: +47 67 57 99 00, Telefax: +47 67 57 99 10, Org.No. NO 945 748 931 MVA
Form No.: 40.61e Issue: January 2008 Page 1 of 1

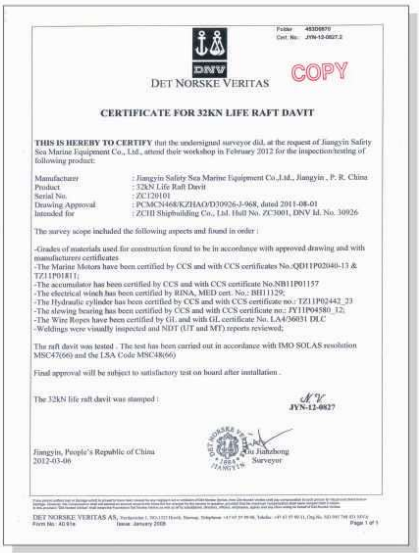

DET NORSKE VERITAS

COPY

CERTIFICATE FOR 32KN LIFE RAFT DAVIT

THIS IS HEREBY TO CERTIFY that the undersigned surveyor did, at the request of Jiangyin Safety Sea Marine Equipment Co.,Ltd., attend their workshop in February 2012 for the inspection/testing of following product:

Manufacturer : Jiangyin Safety Sea Marine Equipment Co.,Ltd., Jiangyin , P. R. China
Product : 32kN Life Raft Davit
Serial No. : ZC120101
Drawing Approval : PCMCN468/KZHAO/D30926-J-968, dated 2011-08-01
Intended for : ZCHI Shipbuilding Co., Ltd. Hull No. ZC3001, DNV Id. No. 30926

The survey scope included the following aspects and found in order :

-Grades of materials used for construction found to be in accordance with approved drawing and with manufacturers certificates
-The Marine Motors have certified by CCS and with CCS certificates No.:QD11P02040-13 & TZ11P01811;
-The accumulator has been certified by CCS and with CCS certificate No.NB11P01157
-The electrical winch has been certified by RINA, MED cert. No.: BH11129;
-The Hydraulic cylinder has been certified by CCS and with CCS certificate no.: TZ11P02442_23
-The slewing bearing has been certified by CCS and with CCS certificate no.: JY11P04580_12;
-The Wire Ropes have been certified by GL and with GL certificate No. LA4/56031 DLC
-Weldings were visually inspected and NDT (UT and MT) reports reviewed;

The raft davit was tested . The test has been carried out in accordance with IMO SOLAS resolution MSC47(66) and the LSA Code MSC48(66)

Final approval will be subject to satisfactory test on board after installation .

The 32kN life raft davit was stamped :

JYN-12-0827

Jiangyin, People's Republic of China
2012-03-06

Liu Jiuhzhong
Surveyor

DET NORSKE VERITAS AS, Nationalveien 1, NO-1322 Høvik, Norway. Telephone: +47 67 57 99 00, Telefax: +47 67 57 99 10, Org.No. NO 945 748 931 MVA
Form No.: 40.61e Issue: January 2008 Page 1 of 1



AMERICAN BUREAU OF SHIPPING

Customer Name: JIANG YIN SAFETY SEA MARINE EQUIPMENT CO., LTD
Attending Office: Nantong
Last Visit Date: 25-Mar-2012
Report Number: WA1230551-E
Last Visit Date: 05-Jun-2012

Certification Of: One(1) Set of 47/5m Electric Crane Quantity: One(1)
Manufactured: JIANG YIN SAFETY SEA MARINE EQUIPMENT CO., LTD

Survey Location: JIANG YIN SAFETY SEA MARINE EQUIPMENT CO., LTD

Equipment Data

Manufacturer Number(S. No.): E130402
Model Number: 2424H4-SE
Destination Vessel (Crane Number): YY226830
Builder/Shipyard: YANGFAN GROUP CO., LTD
Builder ID / Hull No.: 2167

Design Details

Design Date: Design Approved/Reviewed
ABS Reviewing Organization: Shanghai ESD
Drawing Number: Reference 838705 dated 27-APR-2012, 771736 dated 28-OCT-2011

Additional Data

ABS Stamping: ABL Report No., Serial No.
Safe Working Load: 4 tonnes

This is to Certify that the undersigned surveyor(s) to this Bureau did, at the request of the customer, carry out the following survey and report as follows.

Traceability of materials used on this project has been verified.
Welding plans, procedures & welder qualifications have been reviewed as required by Rule/Specifications.
The principal data has been verified in accordance with the applicable Rules/specifications and approved plans, and confirmed to be within acceptable tolerances.
All testing (pressure/load/operational/etc.) has been carried out as applicable and verified in accordance with the applicable Rules/specifications.
Testing machines are maintained in a satisfactory condition and records of their recheck or calibration dates confirmed.
Subject to satisfactory installation, testing and trials after installation onboard the vessel.
Manufacturer confirmed the product does not contain asbestos through Asbestos Free Declarations and/or supporting documents.
Manufacturer item records and/or mill certificates were confirmed to comply with specification.
Final markings for identification confirmed.

1 Particulars
Model: 2424H4-SE
Quantity: 1
Serial No.: E130402



AMERICAN BUREAU OF SHIPPING

Certification Of: Deck1 Set of 2T/9m Hydraulic Slewing Crane Quantity: One(1)
Manufacturer: JIANG YIN SAFETY SEA MARINE EQUIPMENT CO., LTD

Survey Location: JIANG YIN SAFETY SEA MARINE EQUIPMENT CO., LTD

Equipment Data

Design Details

Additional Data

This is to Certify that the undersigned surveyor(s) to this Bureau did, at the request of the customer, carry out the following survey and report as follows:



CERTIFICATE
FOR
CRANE, COMPONENTS AND ACCESSORIES

Manufacturer : Safety Sea Marine Equipment Co. Ltd.,Jiangyin - CHINA
Shipyard : Zhejiang Zhenghe Shipbuilding Co. Ltd. (ZHEJIANG - CHINA)
BV Register N° : 18137R Hull N° : ZH1027
Requirements : Bureau Veritas Rules for the Classification of Steel Ships (July 2011)

Product description : 47/9M Hydraulic slewing crane
Design review : Reference(s): 18137R/ 242AHA-9-00 (Rev 0)
Quantity : 1 set

Type : 242AHA-9
Prime mover type : Hydraulic motor
Hoisting weight : 40 t
Hoisting height : 9.0 m
Max.Outreach : ~10 m/min
Max.SWL working radius : 5.0t/1.8 m
Slewing speed : ~0.8 r/min
Piece/serial number : 1 set/H121139

Enclosures / Remarks :

This certificate is issued by Bureau Veritas as per the above Classification Rules and in compliance with the applicable technical requirements thereto.

Marking : Stamped on the body
Last survey : 10 Nov 2012
Surveyor : Hi-wen Zhang

Issuance date : 24 Nov 2012
Office : BV SHANGHAI

This certificate is issued within the scope of the General Conditions of Bureau Veritas Marine Division available on the internet site www.veristar.com. Any person not a party to the contract pursuant to which this document is delivered may not assert a claim against Bureau Veritas for any liability arising out of errors or omissions which may be contained in said document, or for errors of judgment, fault or negligence committed by personnel of the Society or of the Agents in establishment or issuance of this document, and in connection with any activities for which it may provide.

The Electronic Version is available at: http://www.veristarpsm.com/veristarrepository/Viewer.jsp?id=0fed9ecd.
BV Mod. Ad.E 617a February 2009. The certificate consists of 1 page(s).



Certificate for Electric Crane

Project : Zhejiang Zhenghe Shipbuilding Co.Ltd
Hull No. ZH0028D3

Client : Jiangyin Safety Sea Marine Equipment Co., Ltd
Office : Jiangyin

Client's Order Number : -
Date : 21 May 2012

Inspection Order
Order Status : Complete

Inspection Dates
First : 07 November 2011
Final : 12 May 2012

This certificate is issued to Jiangyin Safety Sea Marine Equipment Co., Ltd to certify that the undersigned surveyor to Lloyd's Register did at their request, attend at their works at Baiyu Road No.815,Nanzha Town,Jiangyin City, Jiangsu Province, P.R China on the above date for the purpose of examining and testing the following Crane, detailed as below:

Description:
One (1) set of 7t Electric Crane
Type: 35-6C-7/11.5
Serials No.: 512525

Scope of inspection:
1) Review of the material's certificate of construction and components;
2) Review of approved drawings and Design Appraisal Document No: SDSJ/ANH/112734, Issue No.: 2, dated 28/11/2011, Shanghai Design Support Services;
3) Review of the Manine hook block certificate, Serials Number:118180;
4) Review of the Manine hoisting bearing certificate, Serials Number:1110277;
5) Review of the manufacturer's test program & test report;
6) Witness of function test, load test and overload test;
7) Randomly witness UT and MT after loading test;
8) Final visual inspection after loading test.
After inspection, the results were found satisfactory.

Identification:
For the purpose of identification, above product was hand stamped with surveyor's initial "ZY" and control number "LR ZH1113087" and final inspect date and corresponding serial number.

Note:
1. the crane is to be examined and tested on completion of installation on board as per relevant Code, to the satisfaction of the attending surveyor.

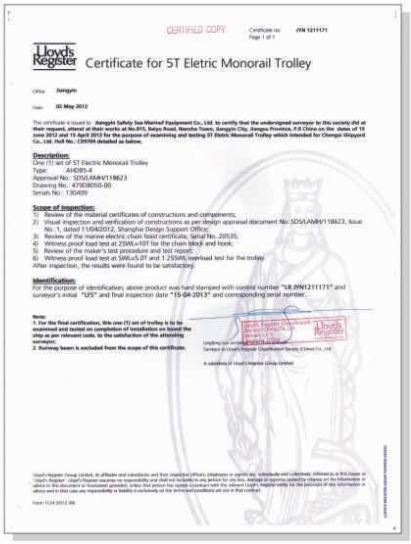

CERTIFIED COPY Certificate no: JIN 1211131 Page 1 of 1

Certificate for 5T Eletric Monorail Trolley

Office : Jiangyin
Date : 02 May 2013

This certificate is issued to Jiangyin Safety Sea Marine Equipment Co., Ltd. to certify that the undersigned surveyor to this society did at their request, attend at their works at No.815, Baiyu Road, Nanzha Town, Jiangyin City, Jiangsu Province, P.R China on the dates of 15 June 2012 and 15 April 2013 for the purpose of examining and testing 5T Eletric Monorail Trolley which intended for Changyi Shipyard Co., Ltd. Hull No.: CH1094 detailed as below.

Description:
One (1) set of 5T Electric Monorail Trolley
Type: AHD85-4
Approval No.: SDSJ/ANH/118623
Drawing No.: 47/80/8050-00
Serials No.: 130409

Scope of inspection:
1) Review of the material certificates of constructions and components;
2) Visual inspection and verification of constructions as per design appraisal document No: SDSJ/ANH/118623, Issue No.:1, dated 11/04/2012, Shanghai Design Support Office;
3) Review of the marine electric chain hoist certificate, Serial No.:20535;
4) Witness proof load test at 25WLL=10T for the chain block and hook;
5) Review of the maker's test procedure and test report;
6) Witness proof load test at SWL=5.0T and 1.25SWL overload test for the trolley.
After inspection, the results were found to be satisfactory.

Identification:
For the purpose of identification, above product was hand stamped with control number "LR J5N1211171" and surveyor's initial "US" and final inspection date "15-04-2013" and corresponding serial number.

Note:
1. For the final certification, this one (1) set of trolley is to be examined and tested on completion of installation on board the ship as per relevant code, to the satisfaction of the attending surveyor.
2. Runway beam is excluded from the scope of this certificate.



中国船级社
CHINA CLASSIFICATION SOCIETY
船用产品证书
CERTIFICATE OF MARINE PRODUCT

This is to certify that, upon request of
Jiangyin Safety Sea Marine Equipment Co.,Ltd
the following products have been inspected by the undersigned surveyor to the Society and are found in comply with the requirements of the specified standards.

Manufacturer : Jiangyin Safety Sea Marine Equipment Co.,Ltd
Purchaser : Sea Others
Product : KITCHEN ELEVATOR
Intended for : Sea Others
Hull No. : Sea Others
Restriction for application of product :
Serial No. : Sea Others
产品检验标准/ Product Inspection Standard

1.CCS《船舶与海上设施起重设备规范》(2007)
CCS Rules for Lifting Appliances of Ships and Offshore Installations 2007
2.中国船级社起重指南
Drawings approved by CCS

产品检验标志/Marking
检查Position : 在产品铭牌上/ On the nameplate of the product
标志样式/Type of Marking : CCS钢印标志/ CCS steel stamp
发证日期 Date of issue : Jan. 25, 2013
验船师 Surveyor : Yan Qiang

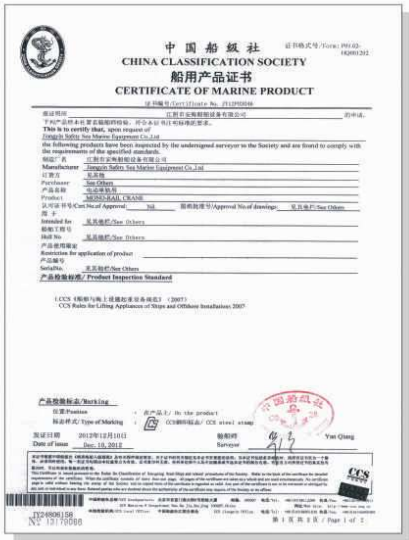

中国船级社
CHINA CLASSIFICATION SOCIETY
船用产品证书
CERTIFICATE OF MARINE PRODUCT

This is to certify that, upon request of
Jiangyin Safety Sea Marine Equipment Co.,Ltd
the following products have been inspected by the undersigned surveyor to the Society and are found in comply with the requirements of the specified standards.

Manufacturer : Jiangyin Safety Sea Marine Equipment Co.,Ltd
Purchaser : Sea Others
Product : MONO-RAIL CRANE
Intended for : Sea Others
Hull No. : Sea Others
Restriction for application of product :
Serial No. :
产品检验标准/ Product Inspection Standard

1.CCS《船舶与海上设施起重设备规范》(2007)
CCS Rules for Lifting Appliances of Ships and Offshore Installations 2007

产品检验标志/Marking
检查Position : 在产品上/ On the product
标志样式/Type of Marking : CCS钢印标志/ CCS steel stamp
发证日期 Date of issue : Dec. 10, 2012
验船师 Surveyor : Yan Qiang



This Certificate is Issued Under the Authority of the Government of the People's Republic of China

中国船级社
CHINA CLASSIFICATION SOCIETY
型式认可证书
CERTIFICATE OF TYPE APPROVAL

This is to certify that the following products produced by the manufacturer stated in the certificate can meet the requirements of the approval standards listed below.

认可产品/ Product Approved
救助艇/救生筏降放设备
RESCUE BOATS/LIFERAFTS LAUNCHING APPLIANCES
SINGLE-ARM RESCUE BOAT & LIFERAFT DAVIT

制造厂/ Manufacturer
江阴市安海船舶设备有限公司
Jiangyin Safety Sea Marine Equipment Co.,Ltd

认可标准/ Approval Standard

证书有效期至/ This Certificate is valid until 2015年3月7日 / Mar. 7, 2015



RINA

TEST CERTIFICATE
CERTIFICATO DI COLLAUDO

N. 2011W801-429-4/ULT

RINA file No.: 2011W801-429
Manufacturer or Supplier: JIANGYIN SAFETY SEA MARINE EQUIPMENT CO.,LTD
Work order No.: NIL
Purchaser: JIANGSU HANTONG SHIP HEAVY INDUSTRY CO.,LTD
Order No.: NIL Intended for: HT081(HI R7907)

THIS IS TO CERTIFY that the items, particulars of which are given below, have been tested and found to be in compliance with the requirements of the RINA rules.
The calibration status and adequacy of the test measurements devices used have been satisfactorily verified.

Description of material:
ONE (1) set of Electric Monorail Crane as per RINA approved drawing No.SHST-4977 Dated 11/06/2010
SWL/4 T Max.Outreach/5.88 m Hoisting Height/30 m S/N:P110510

Tests carried out: - Reviewed the raw material & main components certificates
- Functional test - Load & overload test - Inspection during construction
- Visual inspection & check of compliance with approved drawing.

Markings: 2011W801-429 SWL S/N. Testing date: 18/05/2011

Enclosures: Certificate of hook,steel wire rope

Issued at: SHANGHAI on: 18/05/2011

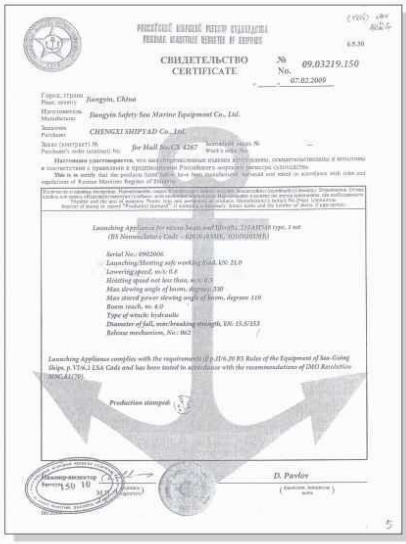

СВИДЕТЕЛЬСТВО
CERTIFICATE
№ 09.03219.150
07.07.2009

Place, year(s) Jiangyin, China
Manufacturer Jiangyin Safety Sea Marine Equipment Co., Ltd.
Purchaser CHENGXI SHIPYARD Co., Ltd.
Hull No.CX 4267

Launching Appliance for rescue boats and liferafts, 2.15 KN/SD type, 1 set
(IS Nomenclature Code — 420.9 (4.5 kN), 910.9 (SD/MA))

Serial No.: 09026006
Launching/Hoisting safe working load, kN: 21.0
Lowering speed, m/s: 0.6
Hoisting speed not less than, m/s: 0.5
Max slewing angle of boom, degrees: 330
Max stowed power slewing angle of boom, degrees: 110
Boom stock, no.: 4.0
Type of winch: hydraulic
Diameter of fall, min/breaking strength, kN: 16.5/353
Release mechanism, No.: 062

Launching Appliance complies with the requirements of ch.III/6.20 RS Rules of the Equipment of Sea-Going Ships, p.VI/6.1 LSA Code and has been tested in accordance with the recommendations of IMO Resolution MSC.81(70)

Production stamped

D. Pavlov

加工车间 Workshop

SAFETY SEA



Processing Workshop-Lathe



Test-bed for crane



Test-bed for E/R Crane and Provision crane



Processing Workshop-slewing crane and provision crane

Processing Workshop-E/R crane

产品系列 Product line

SAFETY SEA

液压吊及电动吊

Hydralicu crane and electric crane








本产品满足船级社的最新规范要求，供船舶起吊生活用品及船舶用品。

吊机由筒体、油箱、吊臂、回转机构、起升机构及变幅机构组成。重要机构如减速机、电动机、齿轮泵、比例阀、马达均采购国外先进产品，保证产品质量；优于市场同类产品。产品具有起重量大、工作范围广、方便维护、对货物的适应性好等特点。

产品在扬帆、COSCO等船厂获得广泛运用，并得到用户的一致好评，欢迎国内外厂商来电咨询洽谈，我们将根据您的要求，为您提供称心满意的产品。

This equipment and material are according to the last standards of ABS classification society . It's used for ng living goods and marine sundries on the ship.

Whole Slewing part consist of foundation, oil cylinder, sl ewing part, luffing part, jib, etc. Main parts like reducer motor, proportional valve, piston motor purchased from oversea. Welcome friends from all circles to contact us business. We'll manufacture best products for you.

产品系列 Product line

SAFETY SEA

多用途起重机
Multipurpose crane



JIANGYIN
SAFETY SEA

AHDB 技术参数

型号 Type	起重量 Working load (t)	起升速度 Hoisting speed (m/min)	船筏吊架 Boat/raft davit		
			最大工作负载 Max.Working load (kN)	起升速度 Hoisting speed (m/min)	下放速度 Lowering speed (m/min)
SS-PC1	1	0-15	21	≥ 18	40~60
SS-PC2	2	0-15	21	≥ 18	40~60
SS-PC3	3	0-15	21	≥ 18	40~60
SS-PC4	4	0-15	21	≥ 18	40~60
SS-PC5	5	0-15	21	≥ 18	40~60

该设备作为备品吊时，可供船舶装卸备品备件伙食及作其它用途。本起重机的起升，回转，变幅及控制部分均为液压驱动，动作可靠、平稳，易于操作。

作为救生筏吊时，相当于一只单臂回转型救生筏架。采用液压驱动回转，可在失电的情况下将吊着空救生筏的筏架回转到舷外；下放时，通过救生筏自身的重力使救生筏降放到水面，乘员在筏内拉动遥控钢丝绳，通过绕在小卷筒上的滑轮，使绞车重锤抬起以控制筏的下放和停止；同样船员也可以在操作平台上抬起重锤进行操作； 安装电动机的绞车可以将空救生筏从水面回收到存放位置。起/放筏的绞车采用电机驱动的齿轮箱式减速机构并具有离心限速和手动下放刹车功能。

When used as a provision crane, It can be used to handle cargoes、hoses and spare parts, etc. The hoisting, slewing and luffing movements and control system of the crane are all driven by hydraulic pressure. All movements are reliable, smooth and easy to operate.

When used as a life raft davit, it is a single arm slewing type davit. The davit is a hydraulic slewing type davit and it would be slewed by accumulator or manual pump driven in case of power failure and it lower the raft on the water by the help of its own weight. The raft is lowered by means of remote control, that the crew can release and stop the hand brake of the winch from inside of the raft via wire connection to the brake arm and wire spool on the winch. Alternatively the crew can operate the hand brake on the deck. A permanently mounted motor on the winch is used for hoisting the empty raft back to the stowed position. The winch drives wire drums by means of motor through the reduction spur gears and equipped with centrifugal speed limiting device, manual lowering brake.

产品系列 Product line

SAFETY SEA | 食品吊 Provlslon crane



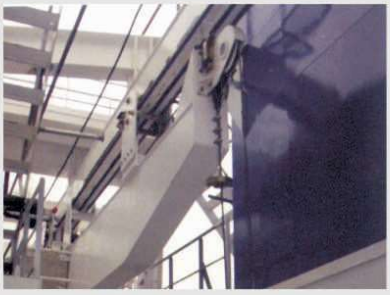



本吊机为移式、带有两台起升装置的单梁船用起重设备，安装在船舶的尾部。主要用于吊装船员供应品及船用设备。

本机采用平移梁式结构，起升机构装在平移梁上。平移梁可在箱形工字梁上移动。主要包括工字梁、平移梁，起升机构，行走机构、电缆绞盘、电器控制箱等。工字梁采用焊接型式，为箱形结构。平移梁为本机主要部件，采用箱形梁结构，其上装有起升机构（两台），行走机构、电缆绞盘、电器控制箱等。行走机构输出齿轮与齿条啮合传动，可使平移梁沿着工字梁运动，并具有自锁定位能力。当船舶横倾摇摆不超过50时，行走机构能正常工作，在停止时能可靠定位，不产生滑移。整体结构安全可靠。

本吊机广泛运用于NCS、NTS等大型知名船厂，并得到用户的一致好评，欢迎国内外厂商来电咨询洽谈，我们将根据您的要求，为您提供优良的产品。

This crane is a marine telescopic mono-rail lifting appliance with two sets of electric rope hoist, intended for using on stern on board. It's mainly used for lifting supplies such as foods, vegetables and fruits etc, and also for lifting component parts in the engine room such as piston and cylinder sleeve etc.

This crane adopts telescopic beam type structure, the marineel. rope hoist is installed on the telescopic beam, the telescopic beam is installed on the mono-rail I-beam and walk. Class of protection of all electric motor and electric appliance are IP56. The crane mainly consists of I-beam, telescopic beam, el. rope hoist, traversing mechanism, cable reel and el. control box etc. . The I-beam adopts I-steel, under which 14mm low flan ge plate is provided, and also with rack. ItS top flange plate connects to ship hull. Its total length and the connecting points with ship hull are decided as per the arrangement of ship hull. The telescopic beam is a main part, adopt box-type beam construction, on which electric rope hoist (twosets), traversing mechanism, cable reel and el. control box etc. are installed. Products widely used in NTS NCS HANTONG SHIYARD&gets widely praised.

产品系列 Product line

SAFETY SEA | 杂物吊 Miscellaneous davit








本吊机用于船舶起吊船舶用品，如作为燃油管吊，苏伊士运河灯吊，泵舱吊，舵机舱吊。也可用做小型船舶的吊货设备，吊机线条流畅简洁；型号多样；具有安全可靠、操作简便、防潮耐腐蚀、无噪音且易维护等特点。凭借较高的产品质量和较高的信誉，先后在扬帆、新扬子以及韩通等船厂广泛使用，并获得用户的一致好评，欢迎国内外厂商来电咨询洽谈，我们将竭诚为您服务，提供优良的产品。

This type crane used to raise lamp or fuel pipe.It can also setup on boat to raised goods. It is widely used in NTS NCS HanTong Shipyard New Yangzijiang Shipyard & gets widely praised Welcome friends from all circles to contact us for business.

液压滑动式水密门
Hrdraulic sliding weathertignt door

液压滑动式水密门系用于船舶水线以下的隔舱水密处的门，一般用在机舱与艉舱间；机舱与锅炉舱间；主机舱与副机舱间等处，平时处于关闭状态。

水密门有电动门开关、手动门开关和驾驶室（集控台）遥控关门三种操作方式。



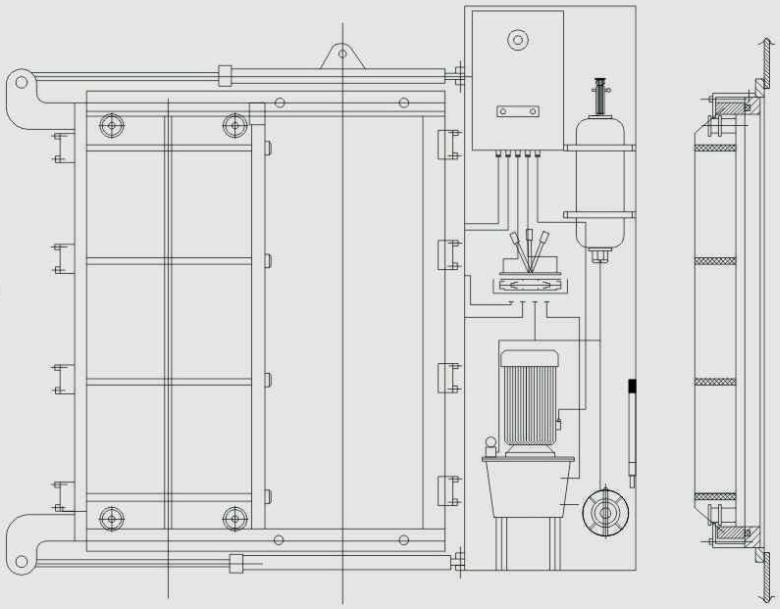

Watertight door suits for separate cabin door under shipping waterline, for example, between engine and stern room, engine room and boiler room, main engine room and auxiliary engine room, etc. Usually, watertight door is close.

There anr three methods to operate door, electric, manual and remte control at WHC or damage control table.

AHSB 技术参数

通孔尺寸 B L	围壁开孔尺寸 B1 L1	门框外形尺寸 B2 L2	B3	开向	重量 kg
600 1000	800 1200	860 1360	1740	左开L	600
600 1200	800 1400	860 1560	1740		670
600 1400	800 1600	860 1760	1740		785
700 1200	900 1400	960 1560	1940	右开R	795
700 1400	900 1600	960 1760	1940		890
600 1500	900 1700	960 1860	1940		985

产品系列 Product line

SAFETY SEA | 机舱行车 Engine room crane

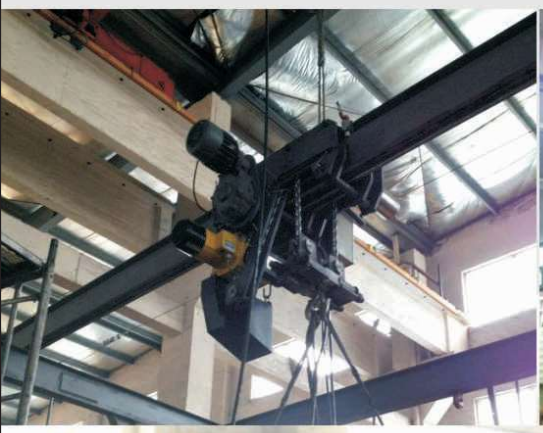







本吊机用于船舶内机舱的维修维护移动和横向移动梁、电动葫芦、纵向和横向驱动系统组成。

吊机的起升和行走马达采用锥形转子电机；工字梁下方安装有齿条，保证电机自锁时整体机构能够及时制动，不产生滑移。起升电机具有双速功能，满足您的不同需求。移动梁两侧均有限位装置，确保设备的安全运行。工字梁上装有维修平台，方便对上方的维护。 整体机构简洁硬、安全可靠、操作方便、运行平稳、低噪音、易维护。

主品在扬帆、澄西、ZPMC等船厂获得广泛运用，并得到用户一致好评，欢迎国内外厂商来电咨询洽谈，我们将根据您的要求，为您提供优良的产品。

The crane: Consists of crab moving longitudinally and transverse, electric hoist,drive system of longitudinally and transverse. The hoist and travelling motor the crane adopts are brake motors with cone rotor, so the crane is compact structured, simple operated, safety guaranteed, easy adjusted and maintained.

Main girder:Longitudinal crab frame is fixed on main bridge of traverse by screw connection, suspended form a pair of fixed longitudinal I-steel by eight wheels. Rack is welded on the bottom of I-steel. Longitudinal crab is driven forward and back through rack-and-pinion gearing.

Crab: The crab suspends form a pair of traverse I-steel by eight wheels, The hoist is fixed under the traverse crab.

Crab is driven through a brake motor with cone rotor, gearbox, rack-and-pinion gearing, moved left and right.

Travelling gear: Travelling gear consist of a brake motor with cone rotor, a gearbox,a drive shaft and a pair of pinions. The pinions are meshed with the racks. Which is welded the other bottom of rails fixed to the engine room.

Electric hoist: Marine electric hoist equipped with two set of brake motor with cone rotor, speed is variable: 8m/min and 0.8m/min, fitted with electric-mechanical brake which comes into operation as soon as the current supply fails or is cut off.

Safety devices: The hoisting gear is equipped additionally with limit stops for the upper and lower extreme of hook movement. When either of the two positions is reached, the hoisting gear is stopped automatically. But can Still be driven in the opposite direction.The extreme of the crane bridge movement is also limited by gear box-limit switches.

Products widely used in YANGFA CHENGXI ZPMC & gets widely praised.

集成手推或手拉式小车组合

额定载荷 500 - 10000 公斤

集成了手推式小车的IT型葫芦小车组合具有极低的净空尺寸，可以适合多种应用领域。

客户可根据要求选用，齿条式或无齿式。

产品选项

- 轨道齿条式
- 防腐蚀选项
- 防火花选项
- 过载保护器
- 集链盒
- 缓冲器选项
- 额定载荷至5吨及起升高度不超过 3米的型号可以配置小车固定装置 (特别适合船上使用，以避免小车意外滑动)

Manul chain hoist with integrated push or geared type trolley model Yalelift IT

Capacity 500 - 10000 kg

The combination of the AHSB with a low headroom manual trolley provides even more flexibility in the application of the AHSB.

Option

- Beam with rack
- Spark resistant features.
- Overload prevention device
- Chain container
- Corrosion resistant version.
- Beam locking device to secure the unloaded trolley in a fixed position on the beam (park position e.g.on ships). Available up to a capacity of 5000 kg for a maximum of 3 m track height.





无齿条式技术参数 Technical date without rack

型号 Type	额定载荷 SWL kg	链条数 Pull of chain	轨道宽度 Width of rail mm	轨道厚度 Thicknessof rail mm	最小转弯半径 Min. turning radius m	3米起升高度净重 Weight kg	3米起升高度净重（带有位置固定装置） Weight kg
AHSB500	500	1	50-180	19	0.9	24	31
AHSB1000	1000	1	50-180	19	0.9	32	40
AHSB2000	2000	1	50-180	19	1.15	49	57
AHSB3000	3000	1	74-180	27	1.5	82	91
AHSB5000	5000	2	98-180	27	2.0	130	140
AHSB10000	10000	3	125-310	40	1.8	-	-

JIANGYIN
SAFETY SEA

AHSB IT 外形尺寸

型号 Type	AHSB500	AHSB1000	AHSB2000	AHSB3000	AHSB5000	AHSB10000
Amin.,mm	245	275	323	382	550	784
B,mm	17	22	30	38	45	38
C,mm	24	29	35	40	47	38
D,mm	14	19	22	30	37	50
F(Geared),mm	92	92	91	107	149.5	113
H1,mm	24.5	24	23.5	32	30.5	55
I(Pushed),mm	71.5	71.5	95.5	131	142.5	169
I(Geared),mm	76.5	76.5	98	132.5	148.5	169
L,mm	270	310	360	445	525	430
L1,mm	130	130	150	180	209	200
L2,mm	159	175	207	256	283	260
M,mm	M 18	M 22	M 27	M 30	M 42	M 48
0,mm	60	60	80	112	125	150
P(Geared),mm	108	110	112	112	117	158
T(area B),mm	400	410	425	440	484	540

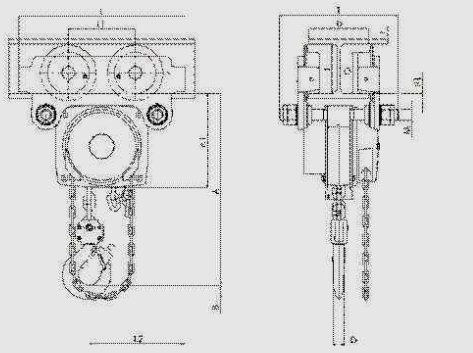

AHSB，500-3000kg

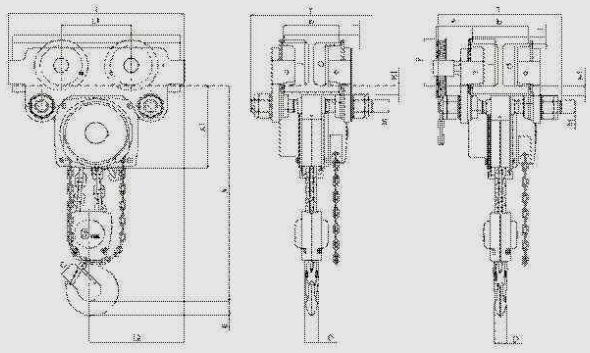

AHSB，5000kg

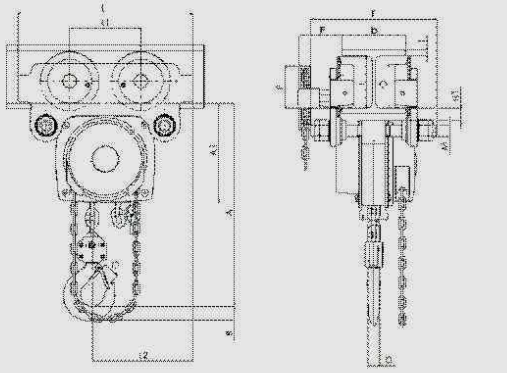

AHSB，500-3000kg

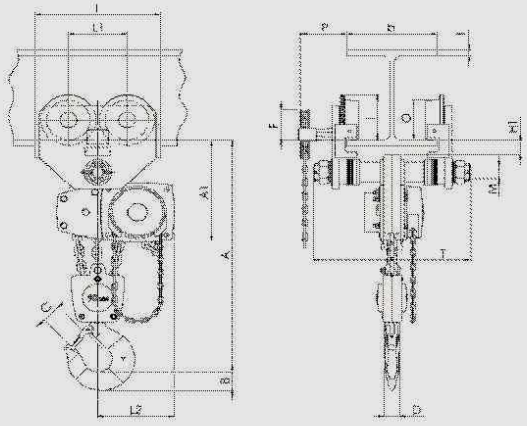

AHSB，10000kg

集成低净空小车组合

额定载荷500 - 10000 公斤

超低净空的AHSBT集成手推或手拉式小车组合是AHSB的升级产品，可适用更低的净空要求。

产品特性

- 新研发的导链装置可以将起重链从葫芦机体的侧面拉动，几乎可与钢梁拉平。
- 使用与AHSBT同款集成小车。
- 本系列产品葫芦在额定载荷3000公斤以下的葫芦均采 用单链结构。
- 小车安装与调节十分方便，而且可以根据钢梁宽度进行精确的调整。
- 小车可以设置为两种基本标准规格，小车适合最大宽度为180毫米的工字钢。
- 小车车轮设计保证最大的轨道贴合面，而采用润滑处理的密闭滚珠轴承保证了钢质车轮的良好运行。
- 小车标准配置带有防坠落和防倾斜装置。

产品选项

- 轨道齿条式
- 过载保护装置
- 集链盒
- 防腐蚀选项
- 缓冲器选项
- 小车固定装置，防止意外滑动（特别适合船上使用）

Hand chain hoist with integrated push or geared type trolley (low headroom) model Yalelift LH
Capacity 500 - 10000 kg
The hand chain hoist model AHSBT with integrated low headroom manual trolley is the consequent further development of the AHSB.Wherever an even smaller headroom is essential, AHSBT is the ideal choice.

Option

- Beam with rack
- Overload prevention device
- Chain container
- Corrosion resistant version.
- Beam locking device to secure the unloaded trolley in a fixed position on the beam (park position e.g.on ships).



AHSBT 型技术参数

型号 Type	额定载荷 SWL	起升高度 Lifting height	链条数 Pull of chain	轨道宽度 Width of rail	吊钩净空高度 hook headroom height	最小转弯半径 Min. turning radius	净重 Weight
	kg	m		mm	mm	mm	kg
AHSBT 500	500	3	1	60-180	188	0.9	31
AHSBT 1000	1000	3	1	70-180	211	0.9	40
AHSBT 2000	2000	3	1	82-180	264	1.15	65
AHSBT 3000	3000	3	1	100-180	316	1.5	112
AHSBT 5000	5000	3	2	110-180	425	2	157
AHSBT 10000	10000	3	3	125-180	565	1.8	on request

JIANGYIN
SAFETY SEA

AHSBT 外形尺寸

型号	AHSBT500	AHSBT1000	AHSBT2000	AHSBT3000	AHSBT5000	AHSBT10000
Amin.,mm	188	211	264	316	425	565
A1,mm	223	250	289	346	345	365
B,mm	17	22	30	38	45	68
C,mm	24	29	35	40	47	68
D,mm	14	19	22	30	37	50
H1,mm	24	24	24	32	31	45
L,mm	270	310	360	445	525	485
L1,mm	130	130	150	180	209	225
L,mm	444	488	582	690	720	805
L,mm	124	135	172	203	175	215
L4,mm	184	201	230	265	283	348
M,mm	M 18	M 22	M 27	M 30	M 42	M 48
O,mm	60	60	80	112	125	150
P(Geared),mm	108	110	112	112	117	165
T(area B),mm	400	410	425	440	484	540

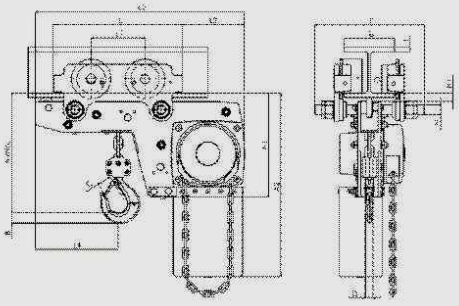

AHSBT，500-3000kg

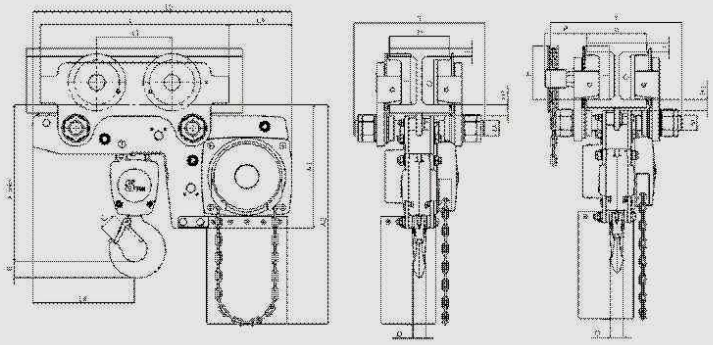

AHSBT，5000kg

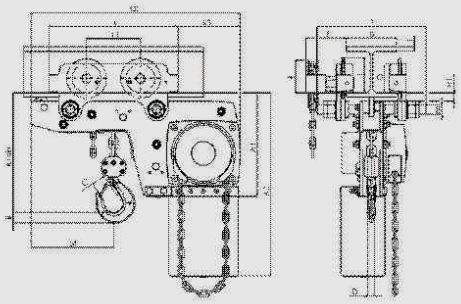

AHSBT，500-3000kg

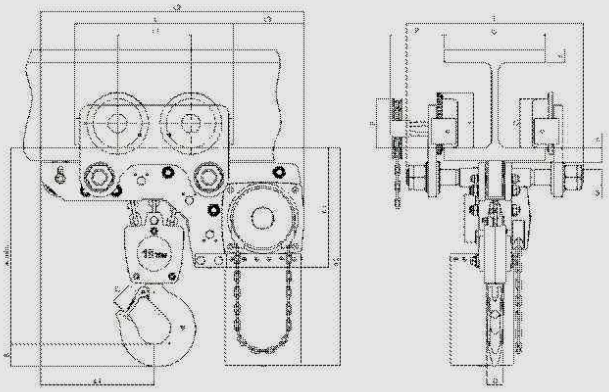

AHSBT，10000kg

SAFETY SEA

超低空电动单轨行车（A型）

Electric Monorail Crane- A Type





JIANGYIN SAFETY SEA

超低空电动单轨行车（B型）
Electric monorail trolley
-super headroom-B Type

AHDBT 型技术参数

起重量 kg	链数 Pull of chain kg	吊钩净高度（C） Hook headroom height(C) mm	提升速度 Hoisting speed m/min	轨道宽度 Width of rail mmmm mm	重量 Weight kg
500	2	200	4/1	60-180	225
1000	2	200	4/1	70-180	225
2000	2	250	4/1	82-180	225
2500	2	250	4/1	100-180	225
3000	2	250	4/1	110-180	225
5000	2	370	2.5/0.6	125-180	257
10000	4	510	1.25/0.3	125-180	283

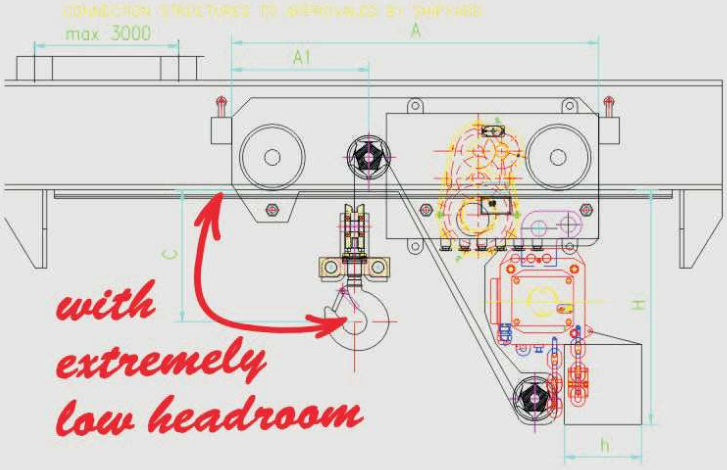

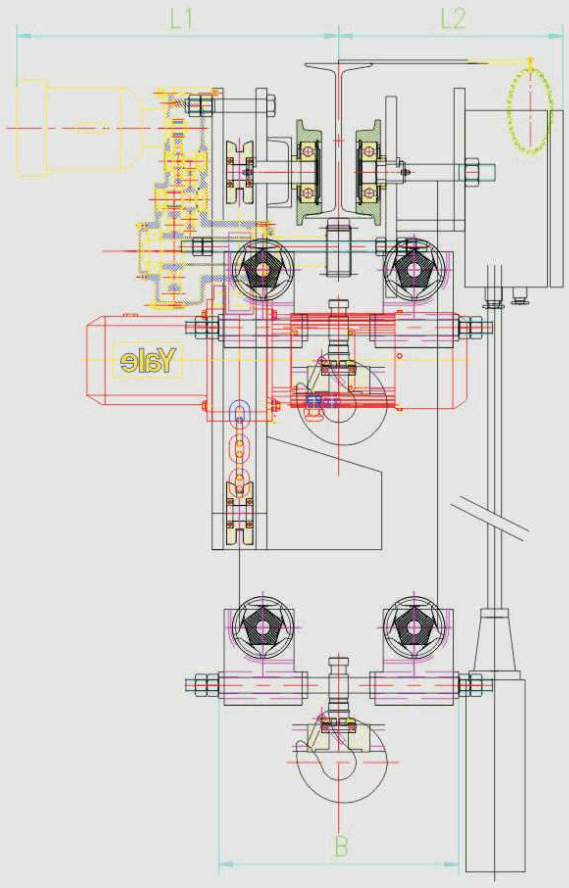





产品系列 Product line

SAFETY SEA | 食品升降机 Dumb waiter

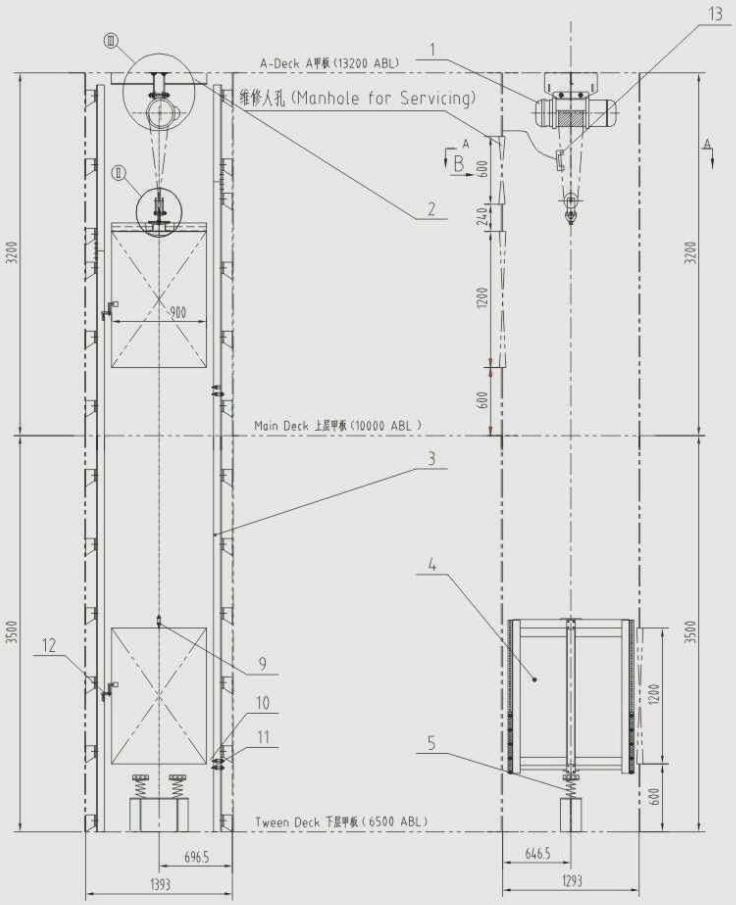

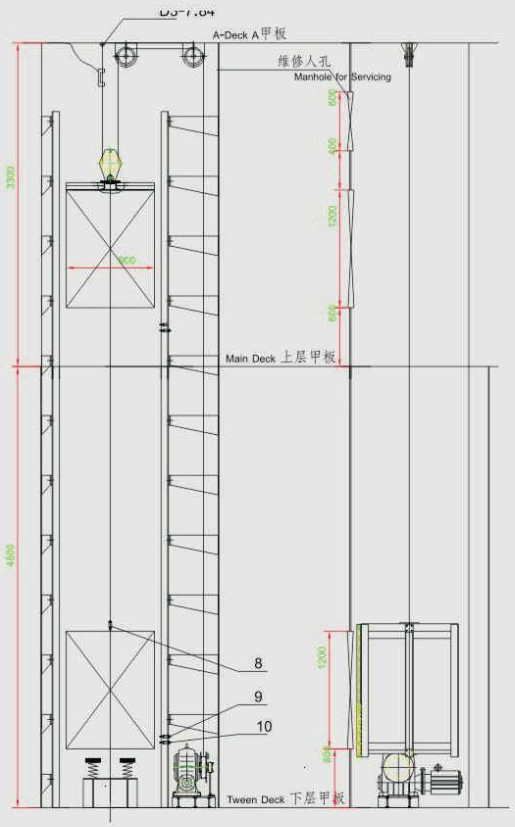

本厨房升降机适用于船舶将食品输送到指定的楼层。

使用方法

1、关上层门，按下使用呼叫按钮

2、按下所需到达的层数按钮，使厨房升降机上升或下降，当升降机到达所需楼层后将自动停止，此时停层指示灯亮。

3、打开层门，取出食品，关上层门。

This dumb waiter is made up of a electric hoist, the cage, the guide rail and the buffer. The structure is simple and running stably and credibly.

Operation system

1. Close the landing door and push the calling button.
2. Push the button of the layer requested, the dumb waiter will rise or descend and will stop automatically when it reach appointed layer and the pilot lamp for layer will be on.
3. Open the landing door, take out the foods and close the landing door.

海工类 Off shore | SAFETY SEA











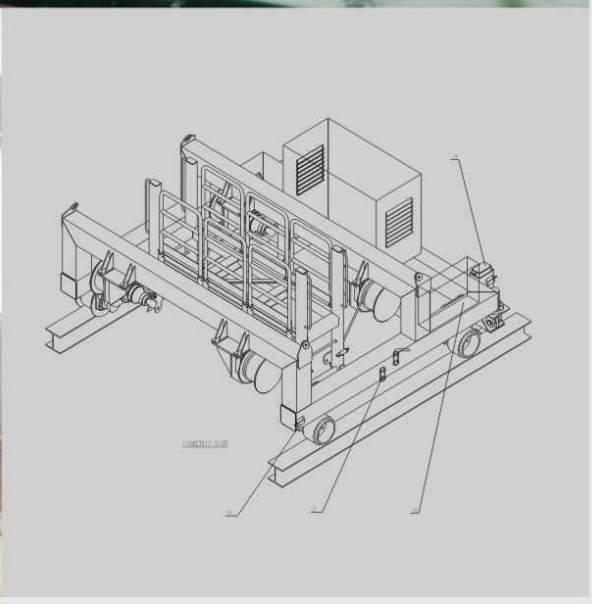

SAFETY SEA

海水提升塔

Seawater Lifting Appliance







产品系列 Product line

SAFETY SEA

救生筏吊

Life raft Crane





产品系列 Product line

SAFETY SEA

电动提升机

Electric Hoist

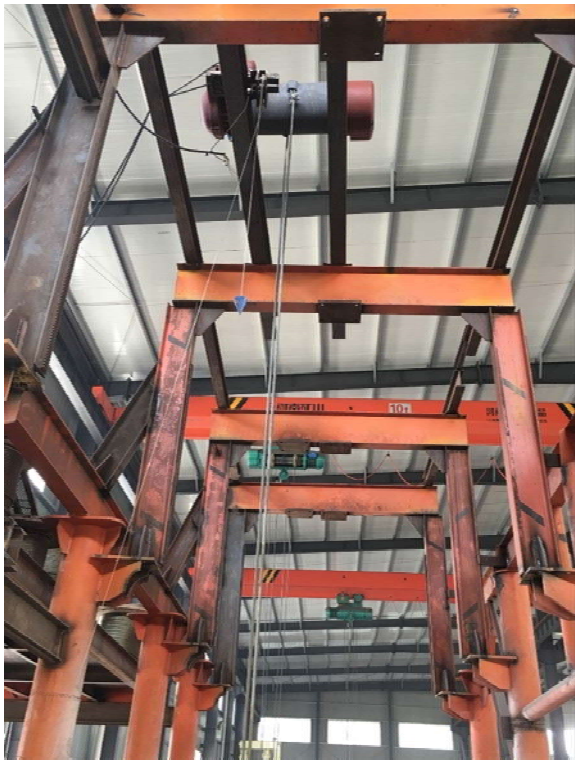



产品系列 Product line

SAFETY SEA

电动软管绞车

Electric Hose Winch





SAFETY SEA

15T30M液压吊

15T30M Hydraulic Crane





SAFETY SEA

海水塔（江苏韩通）

Seawater Lifting Appliance



SAFETY SEA

电动绞盘

Electric Winch





SAFETY SEA

软管绞车

Hose Winch





SAFETY SEA

登风梯

Winding Stair







SAFETY SEA

双软管绞车

Double Hose Winch





SAFETY SEA

靠球吊

Fender Davit







SAFETY SEA

2T/25M 输油管吊

2T/25M Pipeline Crane



SAFETY SEA

10T/17.5M 液压吊

10T/17.5M Hydraulic Crane



SAFETY SEA

龙门吊

Gantry Crane



SAFETY SEA

液压伸缩吊

Hydraulic Telescopic Crane



SAFETY SEA

32T龙门吊

Gantry Crane（32T）



SAFETY SEA

摇摆台

Swaying Platform







SAFETY SEA|

500m 深水卷车

500m Deep-sea Winch



SAFETY SEA | 40T 门字架
40T Gantry Frame





SAFETY SEA

4T/25m 折臂吊

4T/25m Knuckle Boom Crane



SAFETY SEA

第五条腿
5TH Leg




卓越品质 值得信赖
Excellent Quality Truxtworthy



Service Commitments

服务承诺

对您体贴入微的关怀，
是安海人始终坚持的承诺。
Taking good car or you is the commitment to which ANHAI always stick.





无论何时何地，
安海专业的服务与您相伴。
Professional service of ANHAI no matter when and wherre always go with you.



对您的满意，
是我们最大的成就。
To your satisfaction, is our greatest achievement.

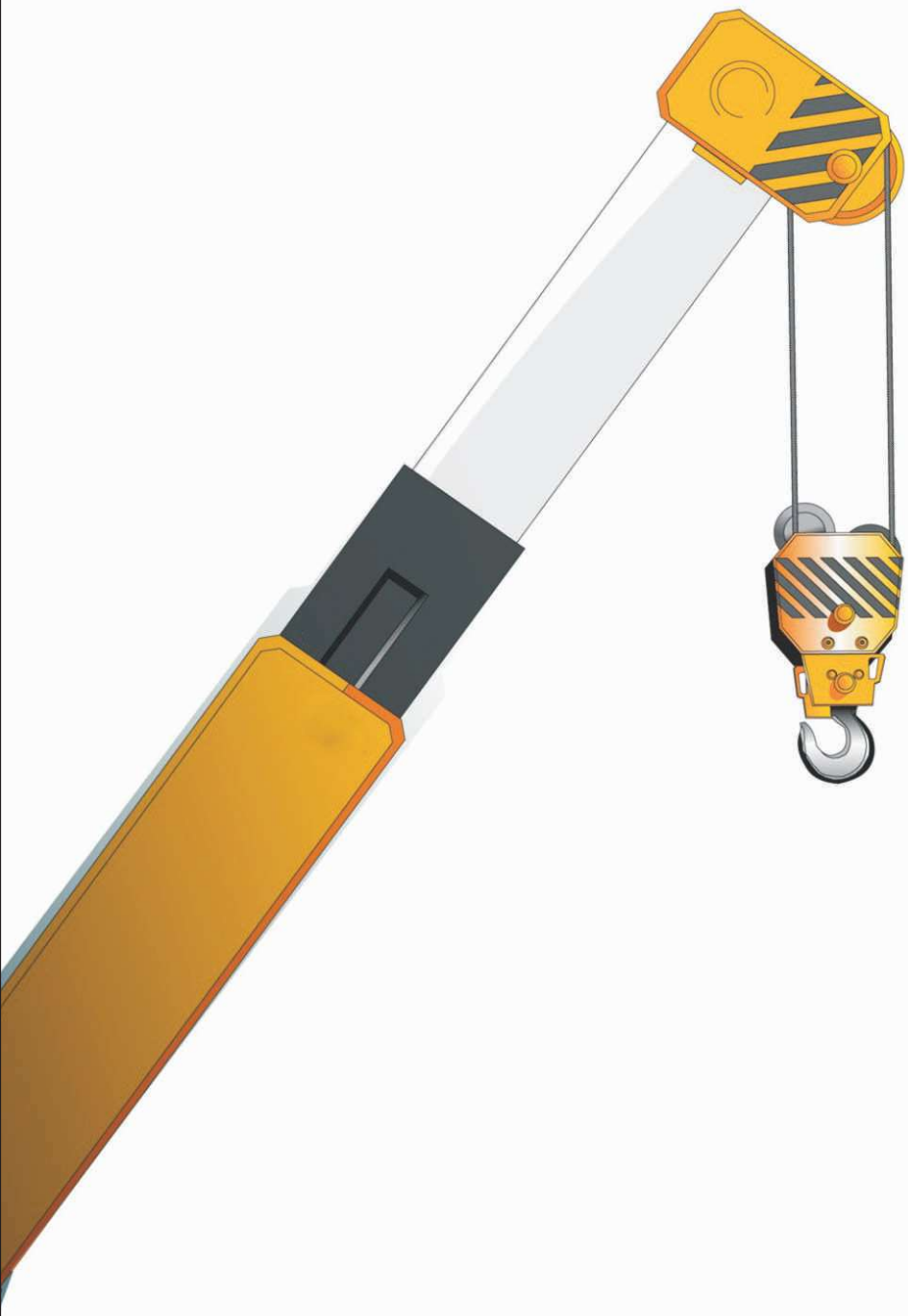

江阴市安海船舶设备有限公司

jiangyin Safety Sea Marine Equipment CO.,Ltd

Add: 815# Bai Yu RD Nan Zha Town Jiangyin City JS CN

Tel:+86 86173220/86171616 /13861616006

Fax:+86 510 86185220 ZIP: 214405

Http://www.jyssm.com

E-mail:safetysea@163.com/ x.feng@vip.163.com